MALT
MECHANICS

Extra Tips and Tricks

$\frac{1}{4}$ bbl

Quarter Barrel Fermenter

&

$\frac{1}{2}$ bbl

Half Barrel Fermenter

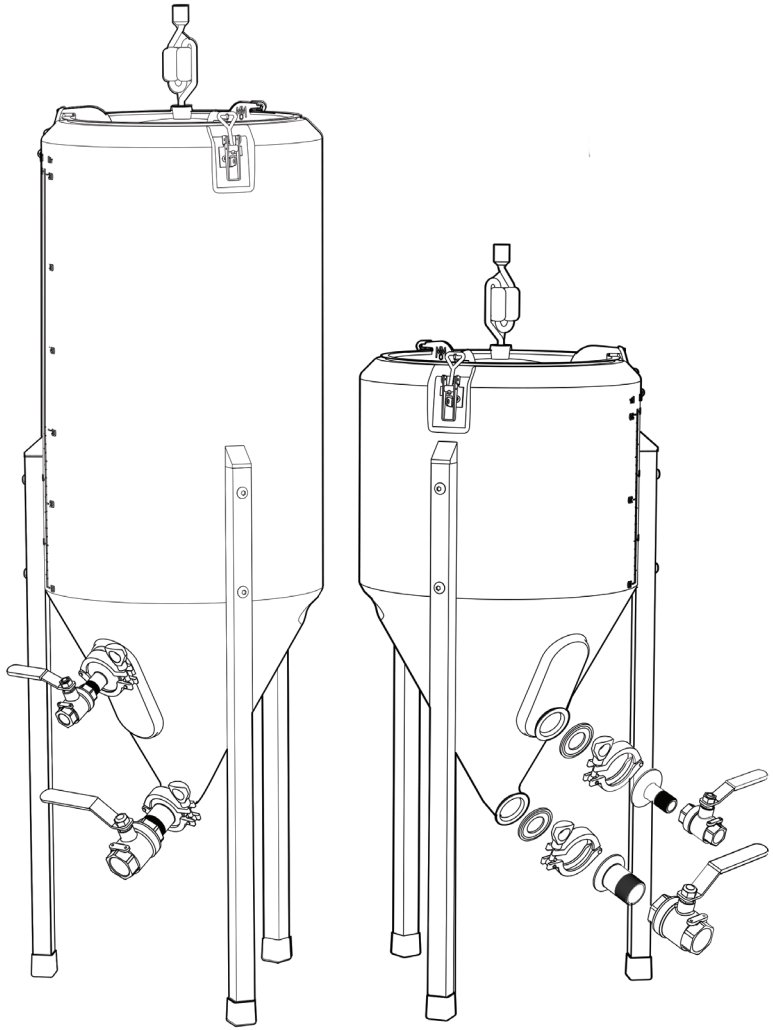

CONTENTS

BOTTLING AND KEGGING

Part 1

Before commencing kegging ensure that no sediment or yeast is sitting above the 1/2" sampling valve; it is advisable to drain any final sediment from the lower 1" ball valve the day before bottling/kegging so you get clear beer flowing through the ½" sampling valve and allow a small period of settling.

Bottling

If you are bottling you may wish to make an adaptor to allow a bottling wand to be fitted to the ½" ball valve. You may do this by obtaining a ½" BSP or NPT to hose barb fitting and adapting a bottling wand on with a piece of tube. Or alternatively you may obtain a ½" BSP or NPT blanking cap and drill a suitable sized hole through it such that a bottling wand can be force-fit into the hole without leaking. Next, open 2 of the lid catches and lift the lid slightly, this should be enough to break the seal and avoid any possibility of water being drawn in through the airlock (alternatively remove the airlock). Proceed with bottling as per your normal bottling process.

Kegging - Gravity Transfer

You may need to ensure your fermenter is in an elevated position if you do not have the ability to pressure transfer. If you are fermenting in a refrigerator you may wish to place a shelf inside the fridge at the desired height if you have a tall enough fridge. At this point you will require a means to transfer into the keg via a hose to ensure you do not oxidise/splash the beer. A ½" BSP barb fitting in the ball valve and a suitable length of silicon hose is ideal. Ensure you purge your keg with CO_2 to avoid oxidation before transfer. Release the catches on the lid and pry it up to relieve the seal, ensure your sterilised hose is down in the bottom of your keg to avoid splashing, then open the valve and monitor the filling process until the keg is full. Replace your lid if a Cornelius style is used, and pressurise with CO_2.

BOTTLING AND KEGGING
Part 2

Kegging - Pressure Transfer

An alternative way of kegging is to create a pressure-transfer rig to pressurise the fermenter using CO_2 and force the beer out via the ½" ball valve without the need to elevate the fermenter.

It is advisable to use the largest hose you can (½") when pressure-transferring as it makes a significant difference to the speed of your transfer. You will need to create a pressure transfer rig. This will usually be incorporated with a blow-off tube setup as it uses the same hole that would otherwise be occupied by your airlock. We recommend constructing one from a threaded ½" bulkhead fitting, and the appropriate fittings to connect your CO_2 up to the fermenter.

Once set up, it is simply a case of ensuring the lid is clamped down firmly and then opening the lower valve once it is set to fill your keg as per the previous instructions. Once the sampling valve is open you can then wind your CO_2 regulator up to no more than 5psi to allow a forced transfer of liquid into your keg.

POST - CLEANING AND STORAGE

We have made cleaning your fermenter easy by ensuring every component that needs to be cleaned and sterilised can be removed from the fermenter and easily cleaned inside and out.

The first task once you have bottled or kegged your beer is to immediately wash your fermenter. You may have a small amount of yeasty sediment left in the bottom of the cone below the sampling port, drain this off first and discard it.

Next put 5-10 litres of water inside the fermenter and with a soft-bristled brush loosen all the solid matter, yeast, krausen and hop bits which will be clinging to the sides of your fermenter. It is usually easier to complete this job outside using a garden hose as the pressure of the hose assists in the cleaning process. Open both bottom ball valves to drain the rinsed water from the fermenter.

Once an initial rinse has taken place close both ball valves and carry out the cleaning regime outlined in the Conical Fermenter User Manual. Once you are happy you have cleaned the fermenter to a high standard you may then begin to dismantle the ball valves from the fermenter and wash and sterilise these independently.

MODIFYING YOUR FERMENTER

Please note any modifications to the fermenter or any of the parts will void the warranty of this product.

That said, we are brewers too and as with almost every bit of home-brewing gear we use, we have our own way of wanting to use it. It is Malt Mechanics goal to provide a great base product upon which people will be able to build the best brewing setup.

Racking Arms

Although we have not created a racking arm ourselves, nor had the need to use one, for those who wish to, a racking arm could potentially be made and fitted to the fermenter inside the Tri Clamp fittings.

Blow-off Tubes and Pressure Transfer Rigs

A blow-off tube can be easily retrofitted into the lid by fitting a suitable fitting through the 22mm hole where the airlock ordinarily resides. The fitting will need to be sealed and have provision to push a piece of hose over it, which is then put into a blow-off bottle partially filled with water to create and airlock. The blow-off setup could also be incorporated with a pressure transfer rig.

Rear leg extension

For those fermenting in refrigerators, likely the biggest problem you will encounter is the compressor bulge in the bottom of your fridge (Some refrigerator models easily accommodate the fermenter as-is at an angle as pictured). One way to combat this is to measure the height of the bulge then cut this length off the rear leg of your fermenter such that your fermenter still sits level when it is positioned in the fridge. You may wish to put a protective pad on the top of the compressor bulge as you will not have a rubber foot on this shortened leg. You may then spigot the inside of the piece of leg that you cut off with a smaller piece of round or square tube which fits snugly inside. Ensure there is a decent length of engagement and the spigot is a snug fit. Then when you remove your fermenter from the fridge for cleaning you will be able to refit the extra piece of leg so your fermenter sits upright on level ground.

Please feel free to share any of your mods on our Instagram or Facebook page!

REPAIRING

If by some misfortune you scratch the inside of your fermenter and are worried about the possibility for the scratch to harbour bacteria, you may wish to repair the plastic using a heat gun or pencil torch.

To do this, you will need to ensure the fermenter is first clean and sterilised, particularly in and around the scratch. You will then need to 'flame' the scratch using a heat-gun or pencil torch, going slowly to avoid discolouration. If done successfully the scratch may still be visible, but glossy, as will the surrounding area.

It is important to note that a scratch does not necessarily mean your fermenter will harbour bacteria, and good sanitation should ensure this to be the case, however the above procedure is mentioned for those who may have such concerns as a peace of mind.

Keep note that the plastic is highly robust, scrubbing with a brush is fine, however solid metal objects if used with force may mark the inside of the fermenter.

DIMENSIONS

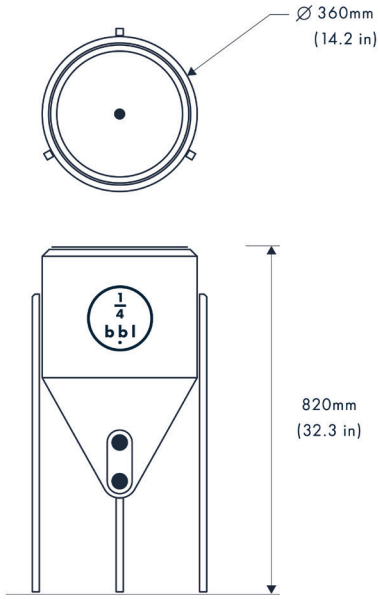

Quarter Barrel
Vol. 30 Litres / 8 Gallons

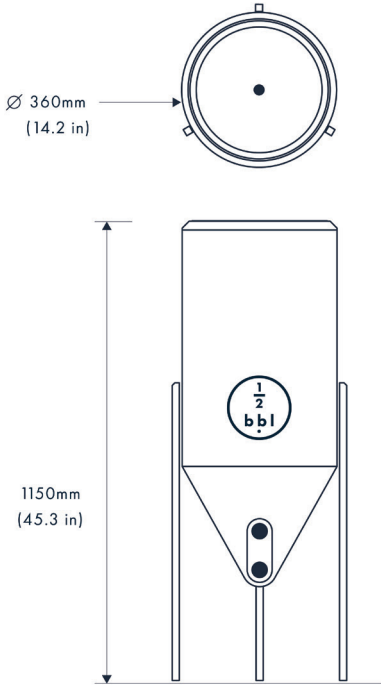

Half Barrel
Vol. 60 Litres / 16 Gallons

THANKS AND LINKS

Thanks to all our Kickstarter backers who made this possible, we could not have made it without you!

To stay in the loop with all the happenings in the world of home brewing, please follow us on Instagram, Facebook and Twitter where we regularly post all sorts of antics, brews and tips on how to make tasty fermented goodness.

We also have a mailing list on our website, so sign up to stay up to date on future products.

www.facebook.com/MaltMechanics

https://twitter.com (@MaltMechanics)

Instagram (@MaltMechanics)